配線図

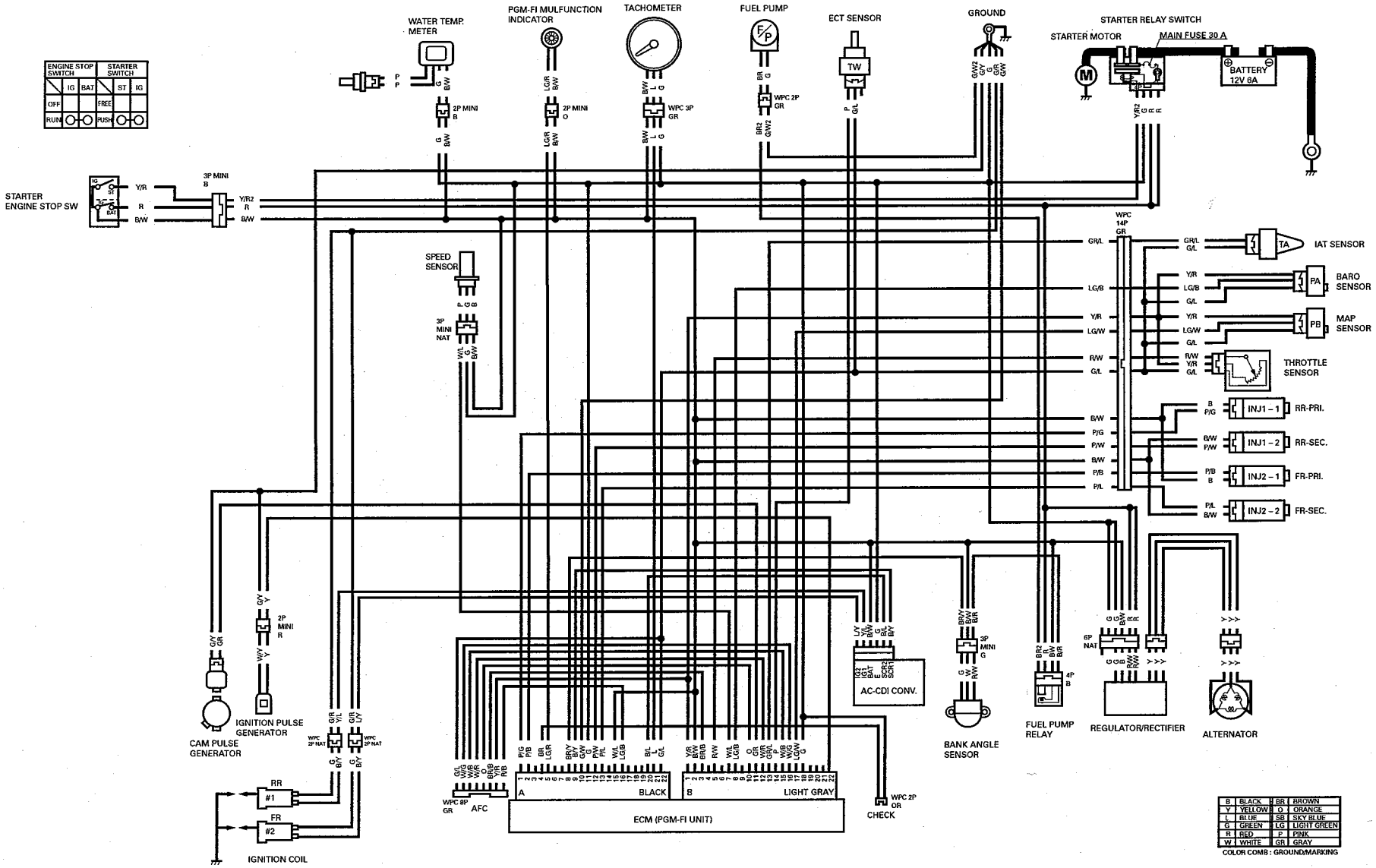
ENGINE STOP SWITCH
STARTER SWITCH
IG
BAT
ST
OFF
FREE
RUN
PUSH
WATER TEMP. METER
PGM-FI MULFUNCTION INDICATOR
TACHOMETER
FUEL PUMP
ECT SENSOR
GROUND
STARTER RELAY SWITCH
STARTER MOTOR
MAIN FUSE 30 A
BATTERY 12V 6A
2P MINI B
2P MINI O
WPC 3P GR
WPC 2P GR
STARTER ENGINE STOP SW
3P MINI B
SPEED SENSOR
3P MINI NAT
WPC 14P GR
IAT SENSOR
BARO SENSOR
MAP SENSOR
THROTTLE SENSOR
INJ1 – 1
RR-PRI.
INJ1 – 2
RR-SEC.
INJ2 – 1
FR-PRI.
INJ2 – 2
FR-SEC.
2P MINI R
CAM PULSE GENERATOR
IGNITION PULSE GENERATOR
WPC 2P NAT
AC-CDI CONV.
3P MINI G
BANK ANGLE SENSOR
FUEL PUMP RELAY
4P B
6P NAT
REGULATOR/RECTIFIER
ALTERNATOR
RR
#1
FR
#2
IGNITION COIL
WPC 8P GR
AFC
A
BLACK
B
LIGHT GRAY
ECM (PGM-FI UNIT)
WPC 2P OR
CHECK
B BLACK
BR BROWN
Y YELLOW
O ORANGE
L BLUE
SB SKY BLUE
G GREEN
LG LIGHT GREEN
R RED
P PINK
W WHITE
GR GRAY
COLOR COMB : GROUND/MARKING